Novatech®

Injection Molded Frame

POLYPRO DOORGLASS ASSEMBLY COMPONENT APPROVAL

"NON-IMPACT"

L F Schmidt

L. F. SCHMIDT LICENSE No. 43409 STATE OF FLORIDA PROFESSIONAL ENGINEER

Digitally signed by Lyndon F Schmidt
Date: 2024.08.22 07:10:51 -04'00'

This item has been digitally signed and sealed by **L. F. Schmidt, P.E.** on the date adjacent to the seal.

Printed copies of this document are not considered signed and sealed and the signature must be verified on any electronic copies.

THIS PRODUCT APPROVAL IS VALID ONLY FOR THE STATE OF FLORIDA

GENERAL NOTES

1. This product has been evaluated and is in compliance with the 8th Edition (2023) Florida Building Code (FBC) structural requirements including the High Velocity Hurricane Zone (HVHZ).
2. When used in the "HVHZ", this product is required to be protected with an impact resistant covering that complies with FBC Section 1626.
3. When used in areas outside the "HVHZ requiring wind borne debris protection, this product is required to be protected with an impact resistant covering that complies with FBC Sections 1609.1.2 & R301.2.1.2.
4. This product is approved for use as a substitute doorglass assembly in conjunction with a glazed steel or fiberglass side hinged swing door and/or fixed sidelite possessing a comparable current Florida Statewide product approval.
5. The design pressure (DP) rating shall be the lesser of the DP rating shown on Sheet 1 of this approval or the DP rating shown in the glazed steel or fiberglass side hinged swing door or fixed sidelite approval being used.
6. The door panel and lite opening size shall not exceed the sizes shown in this approval or the glazed steel or fiberglass side hinged swing door or fixed sidelite approval being used.
7. This product meets the water infiltration requirements for the "HVHZ".
8. This product has been tested in the door and/or sidelite panels as specified on Sheet 3 of this approval. Substitution into a similar product may be approved for use by the local Authority Having Jurisdiction. In all cases, the glazed steel or fiberglass door and/or sidelite used must possess a comparable current Florida Statewide product approval.

TABLE OF CONTENTS

SHEET #	DESCRIPTION
1	Typical Elevations, Design Pressures & General Notes
2	Lite Frame & Glazing Details
3	Fiberglass & Steel Door Panels

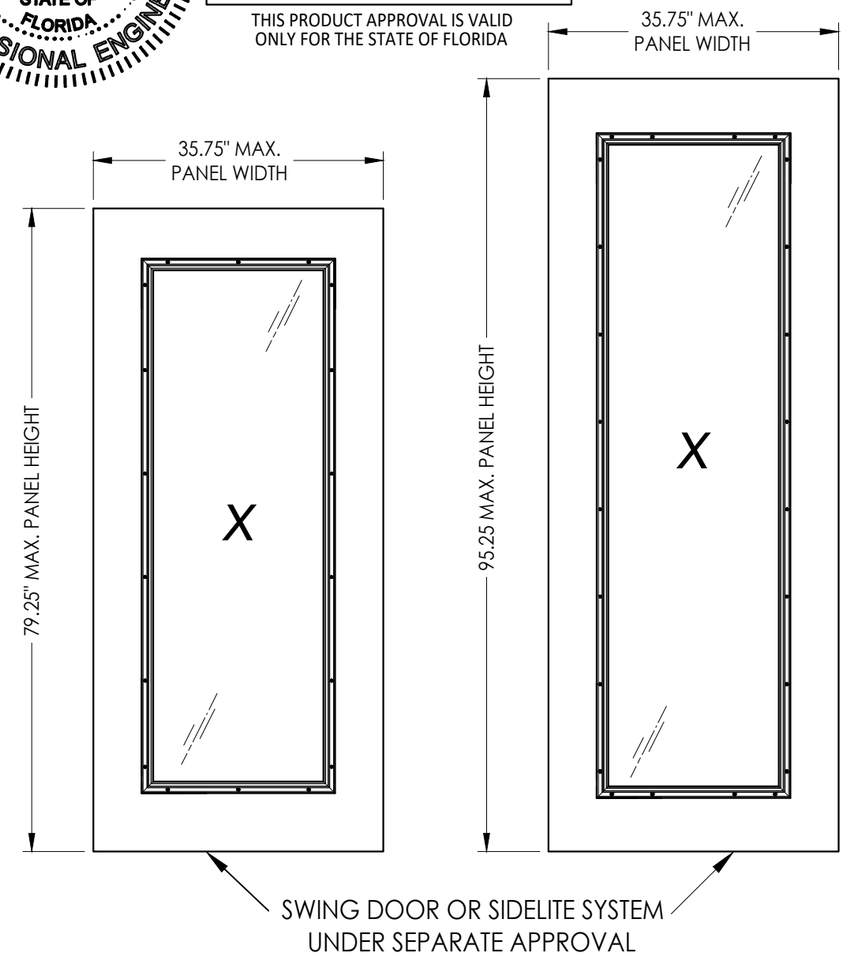

DOOR TYPE	MAX. NOMINAL DOOR HEIGHT	DESIGN PRESSURE (PSF)	
		POSITIVE	NEGATIVE
FIBERGLASS	6'-8"	+65.0	-65.0
	8'-0"	+55.0	-55.0
STEEL	6'-8"	+65.0	-65.0
	8'-0"	+65.0	-65.0

Documents Prepared By:
Lyndon F. Schmidt
P.E. No. 43409
RW BUILDING CONSULTANTS, INC.
P.O. Box 230, Valrico, FL 33595
Phone No.: 813.659.9197
FBPE Registry License No. 9813

PRODUCT: NOVATECH ENTRY DOORS LITE FRAME SYSTEM

PART OR ASSEMBLY: TYPICAL ELEVATIONS, DESIGN PRESSURES & GENERAL NOTES

NO.	DATE	REVISIONS	BY
2	8/21/24	REVISE MANUFACTURER NAME	LFS
1	7/06/23	UPDATE TO 8TH ED. (2023) FBC	LFS

DATE: 12/18/20
SCALE: N.T.S.
DWG. BY: RW
CHK. BY: LFS
DRAWING NO.: FL-30712.1
SHEET 1 OF 3

© 2020 R.W. BUILDING CONSULTANTS INC.

G:\NOVATECH\FL-30712 R4\FL-30712.1.dwg

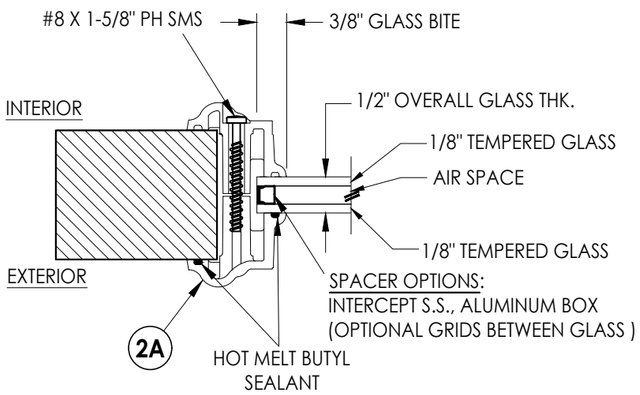

G1 GLAZING DETAIL

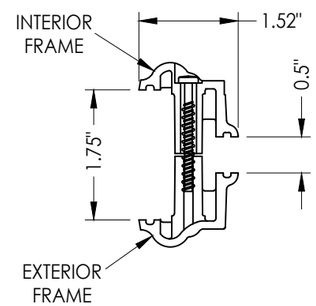

2A INJECTION MOLDED FRAME
Polypro

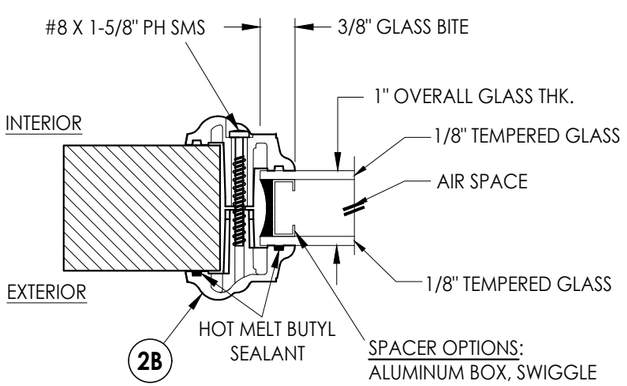

G2 GLAZING DETAIL

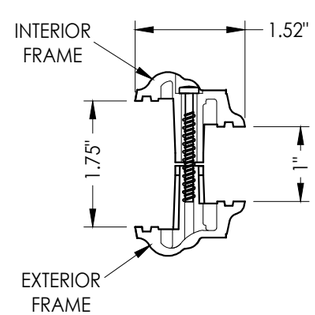

2B INJECTION MOLDED FRAME
Polypro

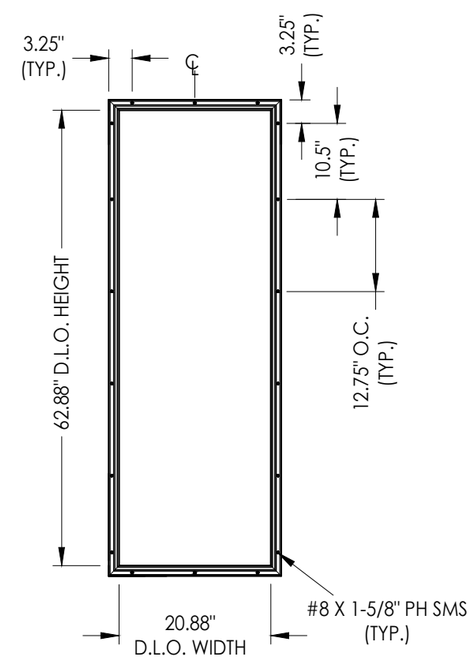

NOVATECH LITE FRAME
6'-8" DOOR PANEL

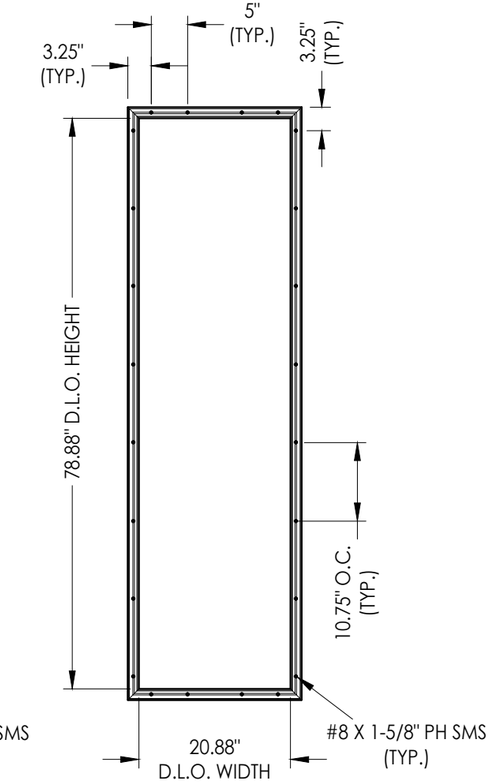

NOVATECH LITE FRAME
8'-0" DOOR PANEL

Documents Prepared By:
Lyndon F. Schmidt
P.E. No. 43409
RW BUILDING CONSULTANTS, INC.
P.O. Box 230, Valrico, FL 33595
Phone No.: 813.659.9197
FBPE Registry License No. 9813

PRODUCT: NOVATECH ENTRY DOORS LITE FRAME SYSTEM

PART OR ASSEMBLY: LITE FRAME & GLAZING DETAILS

NO.	DATE	REVISIONS	BY
2	8/21/24	REVISE MANUFACTURER NAME	LFS
1	7/06/23	UPDATE TO 8TH ED. (2023) FBC	LFS

DATE: 12/18/20
SCALE: N.T.S.
DWG. BY: RW
CHK. BY: LFS
DRAWING NO.: FL-30712.1
SHEET 2 OF 3

© 2020 R.W. Building Consultants Inc.

G:\NOVATECH\FL-30712 R4\FL-30712.1.dwg

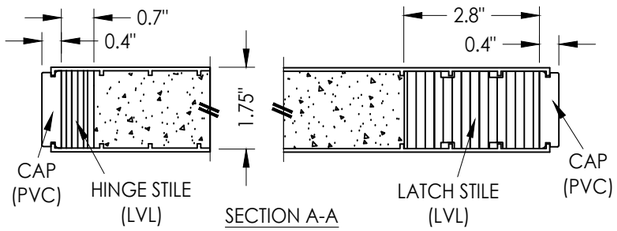

SECTION A-A

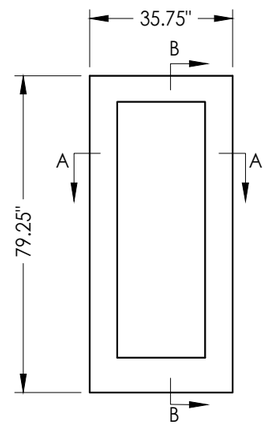

FIBERGLASS DOOR PANEL
Plastpro 6'-8"

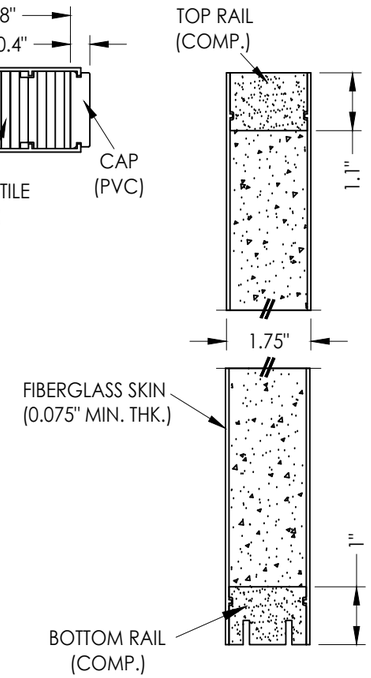

SECTION B-B

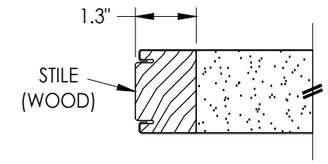

SECTION E-E

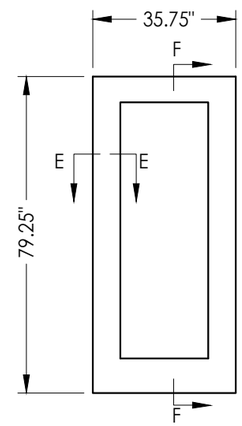

STEEL DOOR PANEL
Novatech 6'-8"

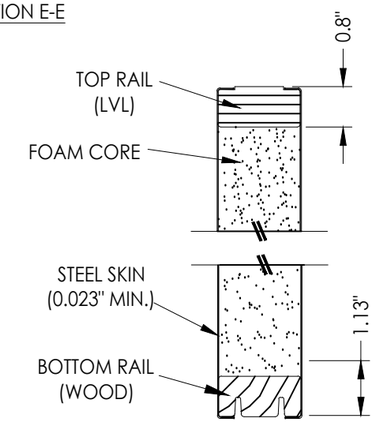

SECTION F-F

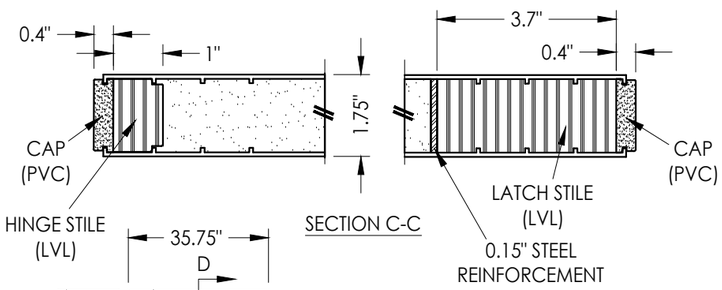

SECTION C-C

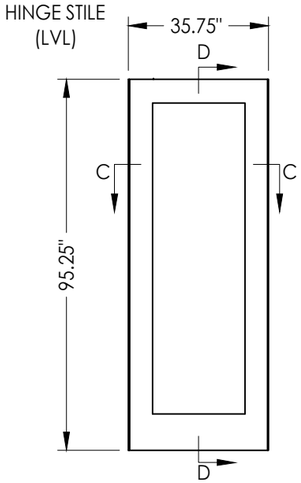

FIBERGLASS DOOR PANEL
Plastpro 8'-0"

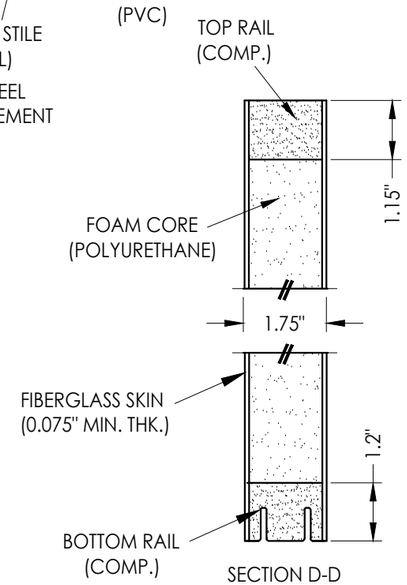

SECTION D-D

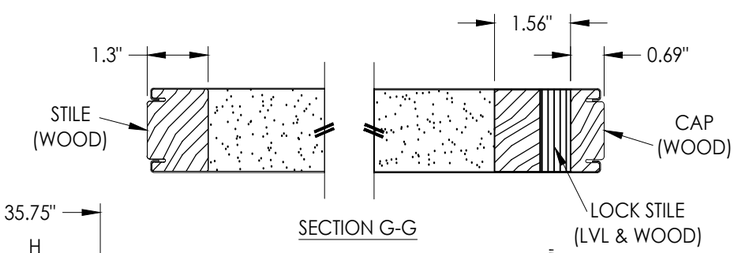

SECTION G-G

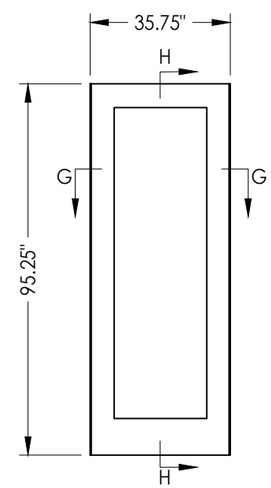

STEEL DOOR PANEL
Novatech 8'-0"

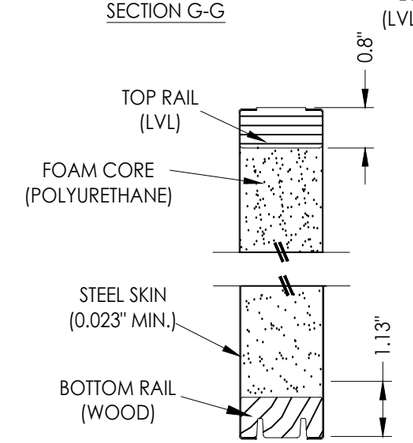

SECTION H-H

Documents Prepared By:
Lyndon F. Schmidt
P.E. No. 43409
RW BUILDING CONSULTANTS, INC.
P.O. Box 230, Valrico, FL 33595
Phone No.: 813.659.9197
FBPE Registry License No. 9813

PRODUCT: NOVATECH ENTRY DOORS LITE FRAME SYSTEM

PART OR ASSEMBLY: FIBERGLASS & STEEL DOOR PANELS

NO.	DATE	NAME	BY
2	8/21/24	REVISE MANUFACTURER NAME	LFS
1	7/06/23	UPDATE TO 8TH ED. (2023) FBC	LFS

REVISIONS

DATE: 12/18/20
SCALE: N.T.S.
DWG. BY: LFS
CHK. BY: RW
DRAWING NO.: FL-30712.1
SHEET 3 OF 3

© 2020 R.W. BUILDING CONSULTANTS INC.

G:\NOVATECH\FL-30712 R4\FL-30712.1.dwg